SAMUEL HEATH

Product Number: V2B1AXX8

Description: 1/2" Concealed thermostatic shower - 2 volume controls

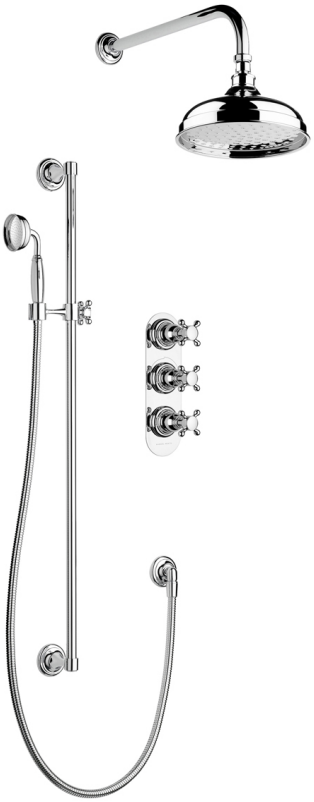

Finishes Available

Chrome Plate

Polished Nickel

Non Lacquered Brass

Antique Gold

Brushed Gold Unlacquered

Specification Drawing

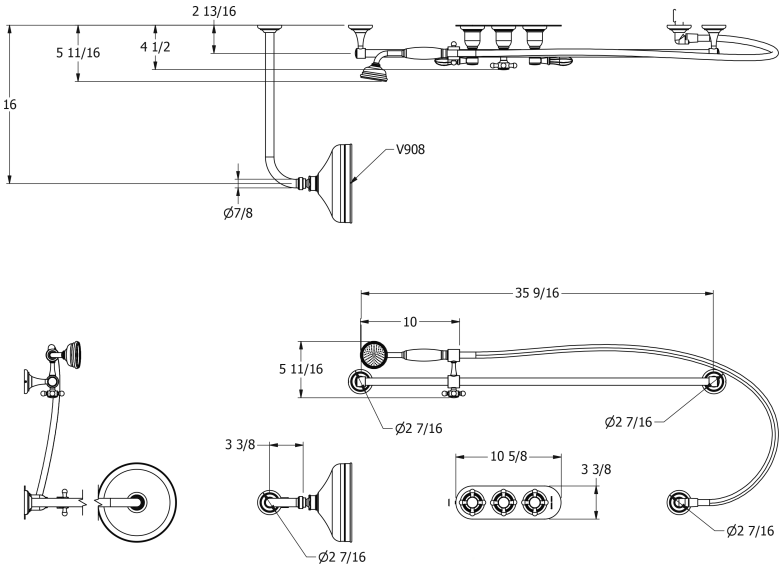

Kit Components

V202-TX

V255-M

V262-A

V264-A

V270

V908

V941

UK Customer Service
Leopold Street
Birmingham
B12 0UJ
Tel: +44 121 766 4200
Email: info@samuel-heath.com

US Customer Service
Federal I.D. No. 58-1504682
Email: usa@samuel-heath.com

Specification Enquiries
Design Centre Chelsea Harbour
1st Floor, North Dome, London
SW10 0XE
Tel: 020 7352 0249
Email: showroom@samuel-heath.com