TEAR SHEET

Presidio Large Linear Lantern

Item # S 5177PN-CG

Designer: Ian K. Fowler

O/A Height: 61"
Fixture Height: 15.5"
Min. Custom Height: 24"
Width: 54"
Canopy: 4.75" x 50" Rectangle
Finishes: HAB, PN
Glass Options: CG
Socket: 5 - E26 Keyless
Wattage: 5 - 60 T10
Weight: 35 Pounds

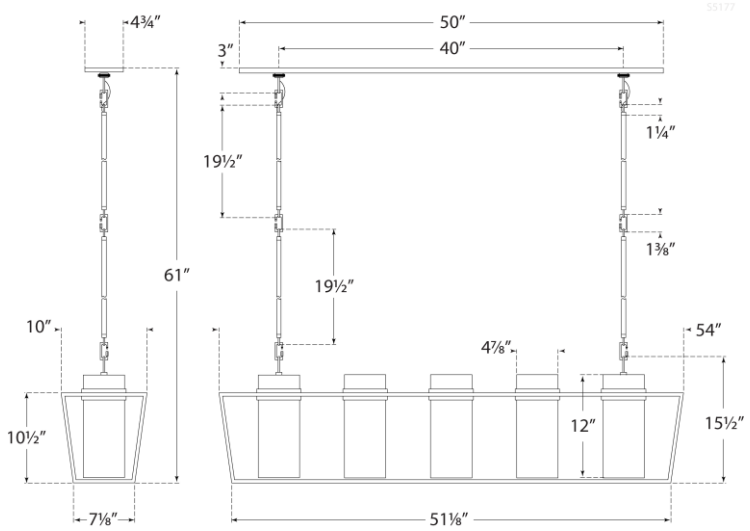

VISUAL COMFORT